FITTING INSTRUCTIONS

Part Number: **4414620/4414630/4414650, 4414690/4414700/4414710**

Product(s) Description:

4414620 – SUMMIT STEP SECT HLX DC/EC BLK | 15ON REQ 4414630/650

4414630 – SUMMIT F/RAIL W/BODY HILUX BLK | 15ON SUITS 4414600/620

4414650 – SUMMIT RETURN HILUX DC/EC BLK | 15ON SUITS 4414620

4414690 – SUMMIT STEP SECT DC/EC | MATT BLACK REQ 4414700/710

4414700 – SUMMIT F/RAIL W/BODY | MATT BLACK SUITS 4414690

4414710 – SUMMIT RETURN W/BODY | MATT BLACK SUITS 4414690

Suited to vehicle/s: **TOYOTA HILUX DUAL & EXTRA CAB 2015 ONWARDS**

WARNING

REGARDING VEHICLES EQUIPPED WITH SIDE AIR CURTAINS & SIDE AIRBAGS;

When installed in accordance with these instructions, the Side Step and Side Rail does not affect operation of the Side Air Curtains and Side Airbags.

ALSO, NOTE THE FOLLOWING:

- This product must be installed exactly as per these instructions using only the hardware supplied.
- In the event of damage to any Side Step and Side Rail component, contact your nearest authorised ARB stockist. Repairs or modifications to the impact absorption system must not be attempted.
- Do not use this product for any vehicle make or model, other than those specified by ARB.
- This product or its fixing must not be modified in any way.
- The installation of this product may require the use of specialized tools and/or techniques
- It is recommended that this product is only installed by trained personnel
- These instructions are correct as at the publication date. ARB Corporation Ltd. cannot be held responsible for the impact of any changes subsequently made by the vehicle manufacturer
- During installation, it is the duty of the installer to check correct operation/clearances of all components
- Work safely at all times
- Unless otherwise instructed, tighten fasteners to specified torque

ARB 4x4 ACCESSORIES

Corporate Head Office

42-44 Garden St
Kilsyth, Victoria.
AUSTRALIA. 3137.

Tel: +61 (3) 9761 6622
Fax: +61 (3) 9761 6807

Australian enquiries sales@arb.com.au
North & South American enquiries sales@arbusa.com
Other international enquiries exports@arb.com.au

www.arb.com.au

Copyright © 2005 by ARB Corporation Limited. All rights reserved, this document must not be reproduced without the express authority of ARB Corporation Ltd

GENERAL CARE AND MAINTENANCE

By choosing an ARB Side Step and Side Rail, you have bought a product that is one of the most sought after 4WD products in the world. Your step and rail is a properly engineered, reliable, quality accessory that represents excellent value. To keep your step and rail in original condition it is important to care and maintain it following these recommendations:

- Prior to exposure to the weather your step and rail should be treated to a Carnauba based polish on all exposed surfaces. It is recommended that this is performed on a six monthly basis or following exposure to salt, mud, sand or other contaminants.

As part of any Pre Trip Preparation, or on an annual basis, it is recommended that a thorough visual inspection of the step and rail and surrounding components is carried out, making sure that all bolts are torqued to the correct specification. Also check that nearby wiring and plumbing are free of damage. Replace any components as necessary. This service can be performed by your local authorized ARB Stockist.

FITTING REQUIREMENTS

REQUIRED TOOLS FOR FITMENT OF PRODUCT:

Basic tool kit	**Sikaflex or Silicon**
Masking tape	**Power drill – (Ø13mm Capacity)**
Axle stands (optional)	**Ø4, Ø8, Ø10 (or Ø11) & Ø12mm Drill Bits**
Torque Wrench/Wrenches - (5Nm TO 100Nm)	**Metric Stepped Drill (with Ø24mm Step)**
Scissors or Stanley Knife	**Hammer & Centre Punch**
Rust Preventing Paint - Black	**½" Drive Allen Key Set - (8mm Allen Key Bit).**
Jack	**Ring Spanners & Sockets; 13, 16 & 19mm**

HAVE AVAILABLE THESE SAFETY ITEMS WHEN FITTING PRODUCT:

Protective eyewear		**Hearing protection**	

NOTE: 'WARNING' notes in the fitting procedure relate to OHS situations, where to avoid a potentially hazardous situation it is suggested that protective safety gear be worn or a safe work procedure be employed. If these notes and warnings are not heeded, injury may result.

UNLESS OTHERWISE SPECIFIED, FASTENER TORQUE SETTINGS:

SIZE	Torque Nm	Torque lb/ft
M6	5Nm	7lbft
M8	22Nm	16lbft
M10	57Nm	42lbft
M12x1.75P ***Nyloc Nuts***	44Nm	32lbft
M12x1.25P (***OE Flange Nuts***)	57Nm	42lbft

Copyright © 2005 by ARB Corporation Limited. All rights reserved, this document must not be reproduced without the express authority of ARB Corporation Ltd

PARTS LISTING

APPLICATION.	PART NO.	QTY	DESCRIPTION
SIDE STEPS TO VEHICLE	6562706R/6562811R	1	SUM STEP DC-EC RH HLX 15ON BLK/FLT MAT BLK
	6562706L/6562811L	1	SUM STEP DC-EC LH HLX 15ON BLK/FLT MAT BLK
	5848436	4	PACKER 8MM SUMMIT HILUX 15 ON
	6151762	4	BOLT M12 x1.25 x140 PC10.9 TZP PT30
	4584363	4	WASHER M12 x 26 x 4 HV300 TZP480
	3194805	2	PLATE PKR U BOLT HILUX 150N
	4581007	4	WASHER FLAT 1/2 x1.1/2 x 4MM SILVER TZP
	6151420	2	BOLT U M12 x1.75P x165 x155 TZP
	6151574	4	NUT NYLOC M12x1.75 PC8 TZP480
	6151204	2	BOLT M10x1.5Px35 PC8.8 TZP
	4581040	2	WASHER M10x25x3 TZP
	4654144R	1	NUT PLT M10x1.5 RH HILUX 15ON
	4654144L	1	NUT PLT M10x1.5 LH HILUX 15ON
	6151022	4	BOLT M8x1.25x25 PC8.8 TZP
	4581302	3	WASHER M8x24x4 TZP
	4584311	1	WASHER M8x18x2 H/T SILVER TZP
	4654145	3	NUT PLT M8x1.25 SUM HLX 15ON
	6500002	2	PLUG RUBBER 60.3 TUBE
	215637	2	STKR DECAL ARB SMALL
	6173940	1	F/KIT 4414510 S/STEPS HLX15ON
	3789482	1	F/INST 4414620/30/50 HLX 15ON
FRONT RAILS TO VEHICLE	6562708R/6562810R	1	F/R ASSY WB RH SUM HLX15ON BLK/FLT MAT BLK
	6562708L/6562810L	1	F/R ASSY WB LH SUM HLX15ON BLK/FLT MAT BLK
	3194813R	1	PL STP F/RAIL DC-EC RH HLX15ON
	3194813L	1	PL STP F/RAIL DC-EC LH HLX15ON
	4581044	8	WASHER FLAT M8 x17 x1.6 TZP
	4581072	16	WASHER FLAT M6 x 20 x 1.6 TZP
	6151022	4	BOLT M8 x1.25 x 25 PC8.8 TZP
	6151032	4	NUT NYLOC M8 x1.25 PC8 TZP
	6151128	16	NUT FLANGE M6 x1.0 PC8 TZP
	6151256	16	SCREW BTN HD M6 x1.0 x16 SS
	6250024	4	SPACER S/STEP / RETURN LG RAD
	6582464	1	CLAMP KIT S/RAIL NG LG RAD
	3789336	1	TEMPLATE S/RAIL CLAMP LG RAD
	6173942	1	F/KIT 4414520/630 F/RAIL HILUX 15ON
SIDE STEP RETURNS TO VEHICLE	6562710R/6562812R	1	RETURN ASSY RH SUM HLX15ON BLK/FLT MAT BLK
	6562710L/6562812L	1	RETURN ASSY LH SUM HLX15ON BLK/FLT MAT BLK
	3194815	2	PLT RETURN DC-EC RH/LH HLX15ON
	4581044	8	WASHER FLAT M8 x17 x1.6 TZP
	4581072	16	WASHER FLAT M6 x 20 x 1.6 TZP
	6151022	4	BOLT M8 x1.25 x25 PC8.8 TZP
	6151032	4	NUT NYLOC M8 x1.25 PC8 TZP
	6151128	16	NUT FLANGE M6 x1.0 PC8 TZP
	6151256	16	SCREW BTN HD M6 x1.0 x16 SS
	6250024	4	SPACER S/STEP / RETURN LG RAD
	6500002	2	PLUG RUBBER 60.3 TUBE
	6173944	1	F/KIT 4414540/650 RET DC-EC HLX15ON

Copyright © 2005 by ARB Corporation Limited. All rights reserved, this document must not be reproduced without the express authority of ARB Corporation Ltd

FITTING PROCEDURE – PREPARATION TO VEHICLE

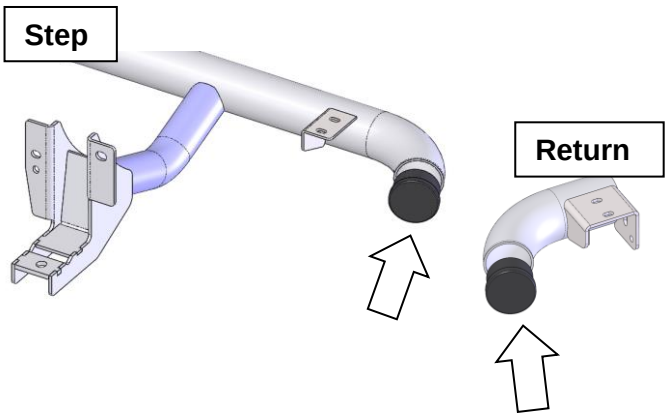

Install Rubber Plugs
RH Shown, LH Opposite

1. Install Rubber Plugs into rearmost ends of the Side Steps as shown.
2. If fitting returns; Install Rubber Plugs into the front most ends of the returns as shown at left.

Remove OE Steps
LH Shown, RH Opposite

3. If fitted, remove the factory side steps by removing the 5x M8 bolts and 1x M8 nut per side. Discard the OE Side Steps and fasteners.

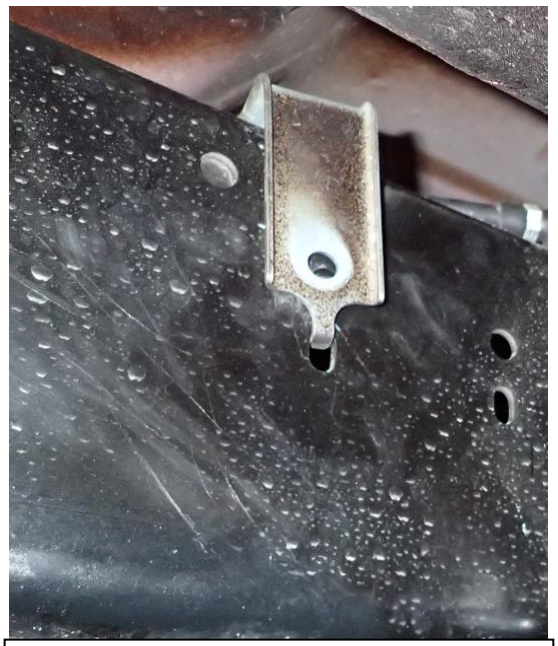

Remove OE Park Brake Brkt Screw
LH Side Only

4. **LH Side only**; Remove 1x M8 Screw securing the LH OE Park Brake Bracket and discard the fastener only.

Copyright © 2005 by ARB Corporation Limited. All rights reserved, this document must not be reproduced without the express authority of ARB Corporation Ltd

SIDE STEP FITMENT TO VEHICLE

Remove front support Bolts & Nuts
LH Shown, RH Opposite

NOTE: Complete Steps 5 to 8 for LH side first, followed by RH side.

5. Working on one side at a time, use a suitable Jack to support the gearbox cross member as shown then remove the two outer bolts and nuts. Discard the two OE bolts. ***Retain the two OE M12x1.25P Flange Nuts for later use.***

CAUTION: Only remove one set of cross member bolts at a time on one side only

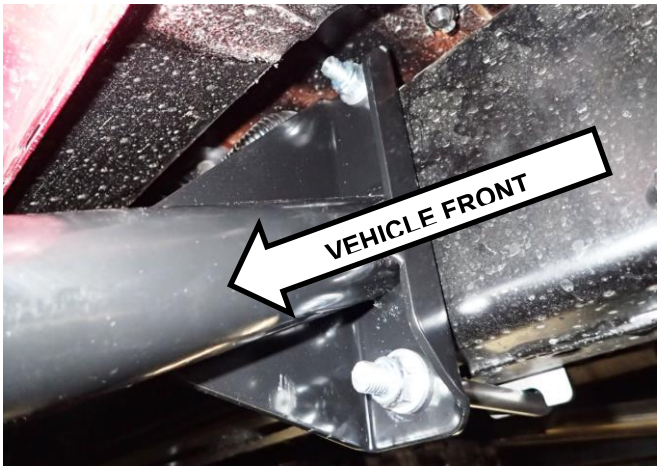

Centre Mount; U-Bolt & Fasteners in position
LH Shown, RH Opposite (outboard view)

6. With the help of another person, carefully lift the step into position, ensuring that the rear of the step is supported and align the front support bracket to the cross member. Then attach the centre mount to the chassis using one Bolt U M12 x 1.75P x 165 x 155, two Washers 1/2x1.1/2x4mm, two M12 Nyloc Nuts and one Plate Packer U-Bolt as shown. Leave loose, do not fully tighten at this stage.

HINT: Angle the U-Bolt and Plate Packer U-Bolt during assembly to clear the surrounding cables and structures if necessary.

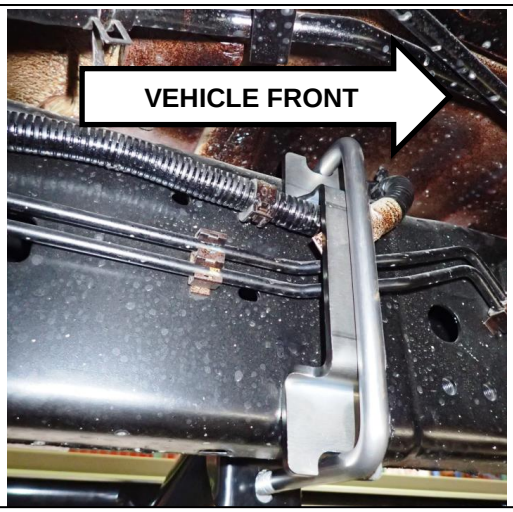

Centre Mount; U-Bolt & Plate Packer
LH Shown, RH Opposite (inboard view)

7. Centre mount (continued)

CAUTION: Take care to ensure that no cables, fuel or brake lines get damaged or crushed during the installation.

Copyright © 2005 by ARB Corporation Limited. All rights reserved, this document must not be reproduced without the express authority of ARB Corporation Ltd

SIDE STEP FITMENT TO VEHICLE – (Continued)

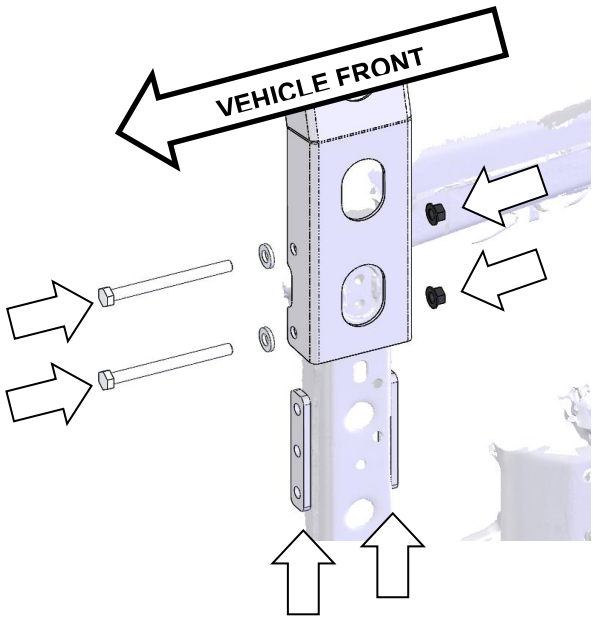

Front Mount; Loosely secure in position
LH Shown, RH Opposite

8. Insert the two 8mm Packers, one on each side of the cross member and carefully align the two outer holes in each with the corresponding holes in the mount, then loosely secure the step to the cross member using two Bolt M12x1.25x140, two Washers M12x26x4 along with two M12x1.25P OE Flange Nuts removed earlier in Step 5. Nip up but do not fully tighten at this stage.

HINT: Use a large flat blade screwdriver to position the front Step support and 8mm Packers in place.

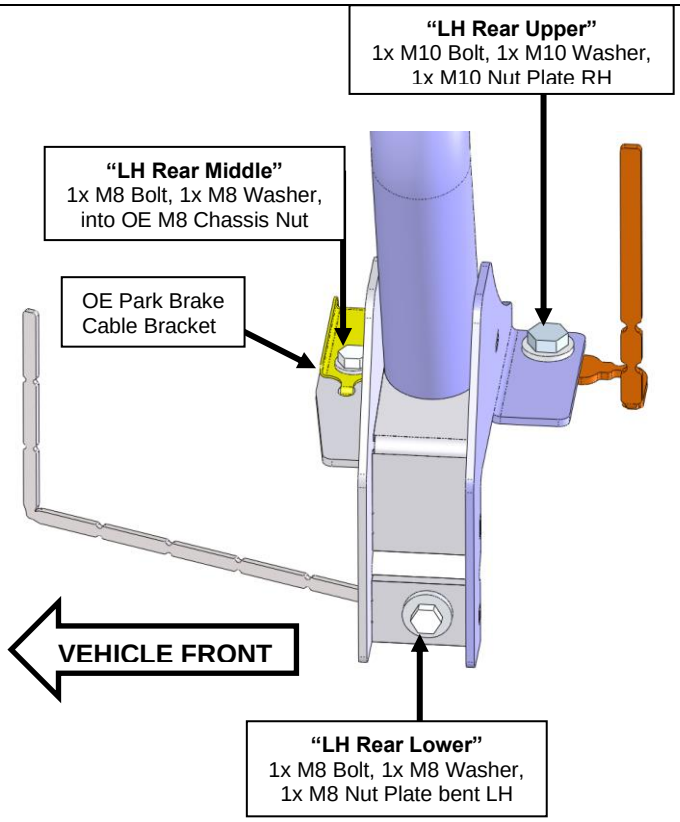

LH Rear Mount; loosely secure in place
LH Shown (with bent nut plates)

9. **LH Rear Mount;**

   a. Use the bending instructions on pages 18, and 20 to bend 1x M10 Nut Plate "LH Rear Upper" and 1x M8 Nut Plate "LH Rear Lower", then loosely attach the rear mount to the chassis using;

   b. **LH Rear Upper**; one BOLT M10x1.5Px35 PC8.8, one WASHER M10x25x3, one NUT PLT M10x1.5 LH HILUX 15ON.

   c. **LH Rear Middle**; one BOLT M8x1.25x25 PC8.8, one WASHER M8x18x2 H/T SILVER, into one OE Chassis Nut (M8x1.25).

   d. **LH Rear Lower**; one BOLT M8x1.25x25 PC8.8, one WASHER M8x24x4, one NUT PLT M8x1.25 SUM HLX 15ON.

Copyright © 2005 by ARB Corporation Limited. All rights reserved, this document must not be reproduced without the express authority of ARB Corporation Ltd

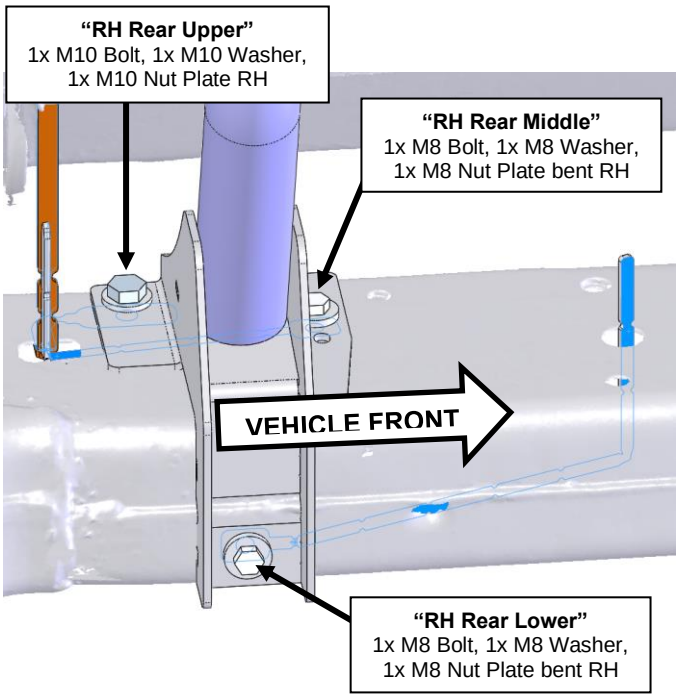

RH Rear Mount; loosely secure in place
RH Shown
(All nut plates are shown bent to shape)

10. **RH Rear Mount;**
    a. Use the bending instructions on pages 18, 19 and 20 to bend 1x M10 Nut Plate "RH Rear Upper", 1x M8 Nut Plate "RH Rear Middle" and 1x M8 Nut Plate "RH Rear Lower", then loosely attach the rear mount to the chassis using;
    b. **RH Rear Upper**; one BOLT M10x1.5Px35 PC8.8, one WASHER M10x25x3, one NUT PLT M10x1.5 RH HILUX 15ON.
    c. **RH Rear Middle**; one BOLT M8x1.25x25 PC8.8, one WASHER M8x24x4, one NUT PLT M8x1.25 SUM HLX 15ON.
    d. **RH Rear Lower**; one BOLT M8x1.25x25 PC8.8, one WASHER M8x24x4, one NUT PLT M8x1.25 SUM HLX 15ON.

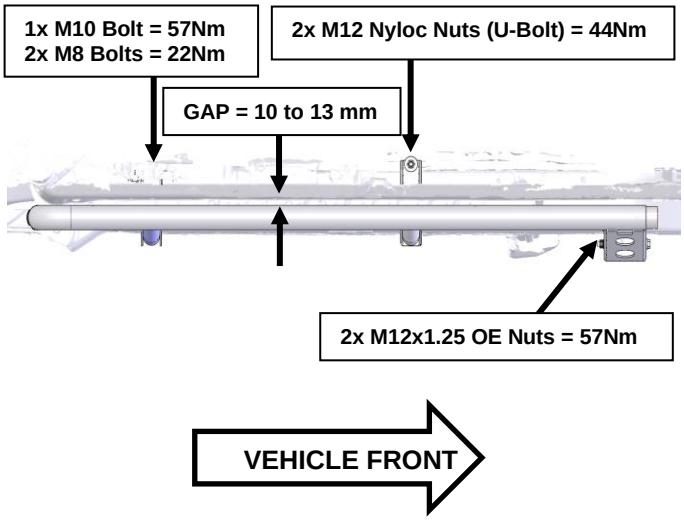

Align Step and Tighten Fasteners
RH Shown, LH Opposite

11. Align the Side Steps to the vehicle lower door sill and tighten all fasteners installed in steps 6 to 9. Note: Vertical gap between lower sill and top of step rail should be even and approximately 10 to 13mm all the way along when viewed horizontally as shown.

    Torque to specification.

    M8 BOLTS = 22Nm
    M10 BOLTS = 57Nm
    M12 NYLOC NUTS = 44Nm
    M12x1.25 OE FLANGE NUTS = 57Nm

HINT: Trim all nut sticks at first notch protruding out of the chassis, then carefully push back inside the chassis to avoid vibration and rattle.

12. Repeat Steps 5 to 8 & 10 to 11 on the RH side of the vehicle.

Copyright © 2005 by ARB Corporation Limited. All rights reserved, this document must not be reproduced without the express authority of ARB Corporation Ltd

FRONT SIDE RAIL FITMENT TO VEHICLE

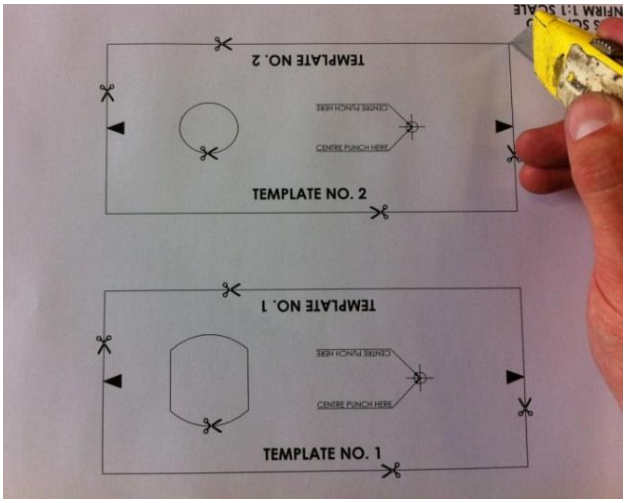

13. From Template sheet 3789336 use Scissors or a Stanley Knife to carefully cut out Templates 1 and 2 including the 2 x pieces from the inside – (See image at left).

NOTE: Complete Steps 17 to 49 if fitting Front Rails. Otherwise proceed to Step 50 if fitting Returns.

14. Use masking tape to wrap **<u>1 x layer only</u>** of tape around the Bull Bar Outer Frame to protect it from damage. Ensure masking tape is applied flat and without creases.

WARNING: If more than 1 x layer of masking tape is applied and/or creases are present it will affect the use of the drilling templates and could result in the Bull Bar being incorrectly drilled and not serviceable.

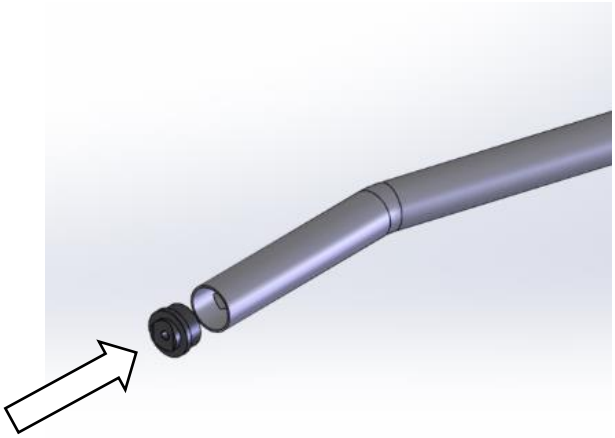

15. Install Tube Spigot into the front of the Side Rail – Install without spacers fitted.

Copyright © 2005 by ARB Corporation Limited. All rights reserved, this document must not be reproduced without the express authority of ARB Corporation Ltd

FRONT SIDE RAIL FITMENT TO VEHICLE - CONTINUED

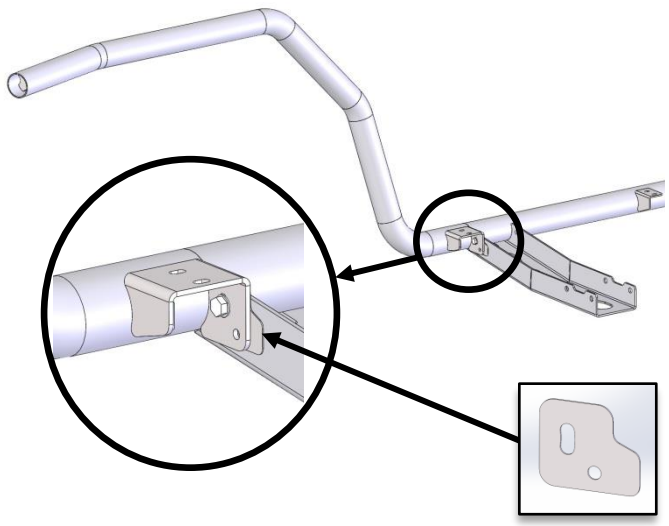

16. Place the Front Side Rail assembly onto the end of the Side Step Rear section as shown.

    When the Step and Side Rail tubes butt together, assess if any gap exists between the bracket faces. Should a gap exist, up to 2 x 1mm Spacers (6250024) per side may be installed between the Side Step and Side Rail brackets to obtain correct fitment.

17. Attach using an M8x25 Bolt, 2x M8 Flat Washers and an M8 Nyloc Nut.

    Note: Do not fully tighten at this stage.

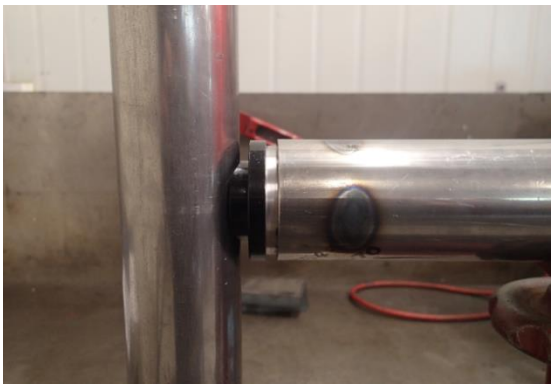

18. Hold Side Rail so that when viewed from the side of the vehicle the top tube runs parallel to the installed Side Steps and the Side Rail sits as desired against the side of the vehicle.

19. Offer Side Rail/Tube Spigot up to the back of the Bull Bar outer frame. – If a gap exists slide Tube Spigot forwards until it contacts the Bull Bar outer frame.

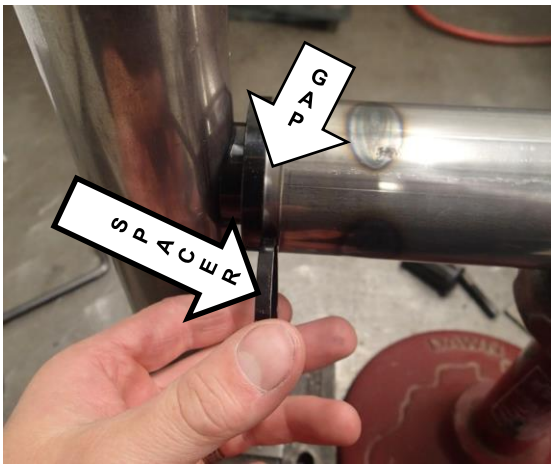

20. Assess the gap between the front end of the Side Rail and the Tube Spigot. Select the closest matching Spacer/Spacers to fill the gap. (Spacer options: Nil / 5mm / 10mm or 15mm (5mm + 10mm Spacers).

    - **Note: If the gap is too large for the Spacers to fill or too small (ie. the tube spigot cannot be fitted) adjustment of the Bull Bar may be required.**

21. Swing the Side Rail outwards and away from the vehicle allowing installation of appropriate/selected spacer into gap between the front end of the Side Rail and the Tube Spigot. (5mm shown in this instance).

Copyright © 2005 by ARB Corporation Limited. All rights reserved, this document must not be reproduced without the express authority of ARB Corporation Ltd

FRONT SIDE RAIL FITMENT TO VEHICLE - CONTINUED

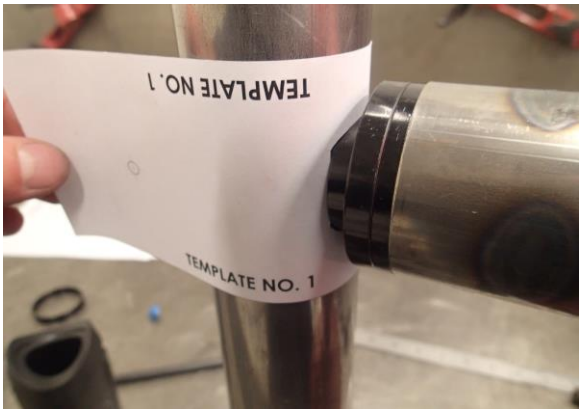

22. Swing the Side Rail inwards and install "TEMPLATE 1" between the end of the Tube Spigot and the Bull Bar outer frame

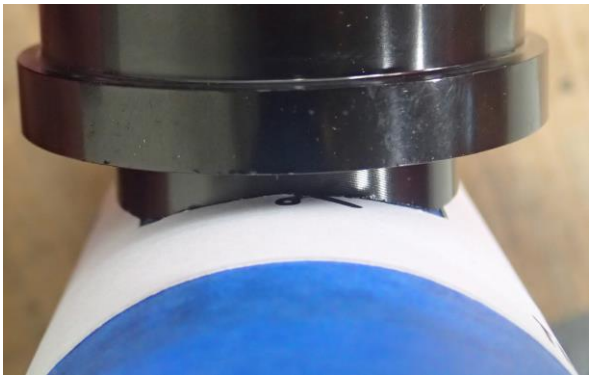

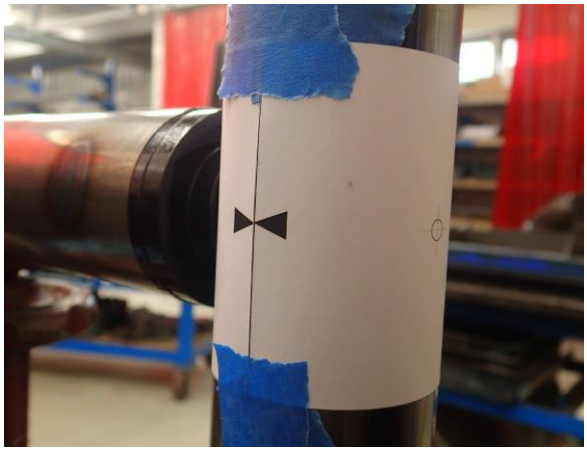

23. Carefully align and centre "TEMPLATE 1" with the end of the Tube Spigot and wrap around the Outer Frame Tube.
    - **Note: Ensure the indicator arrows are aligned before taping into position with Masking Tape – (AS SHOWN BELOW).**

24. Using a Centre Punch, carefully Punch the outer frame at the centre mark of "TEMPLATE 1".
25. Remove Side Rail and set aside.
26. Remove "TEMPLATE 1" and retain.

    Note: <u>Do not discard.</u> Template will be re-used for the opposite side clamp installation.

IMPORTANT: COVER THE UPPER SURFACES OF THE BULLBAR WING WITH MASKING TAPE OR RAGS TO PREVENT DAMAGE FROM DRILL SWARF.

Copyright © 2005 by ARB Corporation Limited. All rights reserved, this document must not be reproduced without the express authority of ARB Corporation Ltd

FRONT SIDE RAIL FITMENT TO VEHICLE - CONTINUED

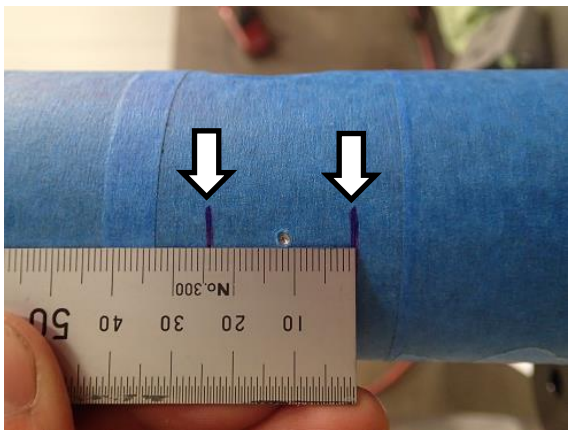

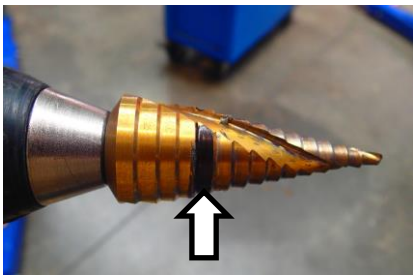

27. Using a marker pen, mark the outer frame 12mm above and below the Centre Punch mark (12mm + 12mm = 24mm).

    - **Note: These marks on the outer frame give an indication of how far to drill with the Stepped Drill.**

28. Using a marker pen, mark the Ø24mm step on the Stepped Drill.

    -Note: These marks on the Stepped Drill give an indication of how far to drill to achieve the correct diameter hole in the outer frame.

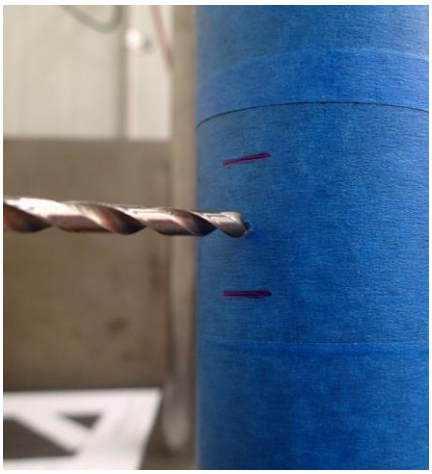

29. At the location of the Centre Punch mark, use a Ø4mm (or similarly sized) Drill Bit to drill a pilot hole through the ***FRONT*** face of the Bull Bar outer frame.

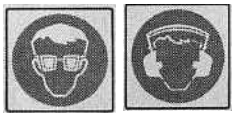

Warning: Drilling operations can result in flying metal debris, safety glasses should be worn.

30. Use a Stepped Drill Bit to drill the Ø4mm pilot hole out to Ø24mm.

WARNING - <u>Do not drill past the 24mm marks on the outer frame or the Ø24mm mark on the Stepped Drill - Drilling too far will destroy the Bull Bar.</u>

Warning: Drilling operations can result in flying metal debris, safety glasses should be worn.

Copyright © 2005 by ARB Corporation Limited. All rights reserved, this document must not be reproduced without the express authority of ARB Corporation Ltd

FRONT SIDE RAIL FITMENT TO VEHICLE - CONTINUED

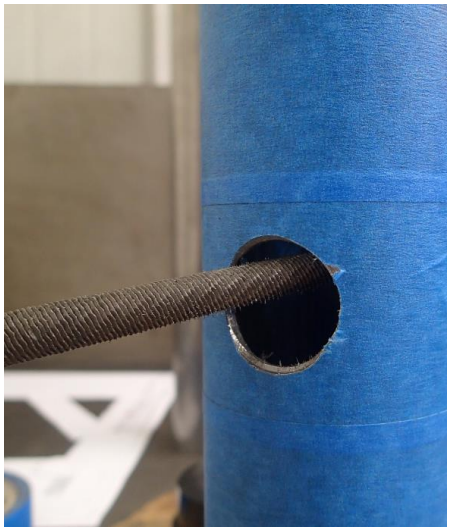

31. Using a small Round or Half-Round File carefully remove any burrs from the edge of the Ø24mm hole.

    -Note: Care should be taken to avoid damaging the outer frame paintwork surrounding the Ø24mm hole.

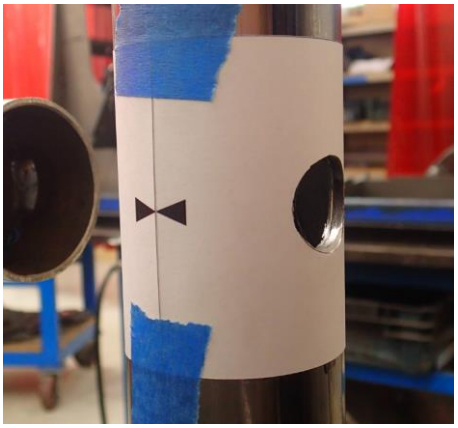

32. Carefully align “TEMPLATE 2” and centre over the Ø24mm hole. Wrap around the Outer Frame Tube.

    - **Note: Ensure the indicator arrows are aligned before taping into position with Masking Tape – (AS SHOWN).**

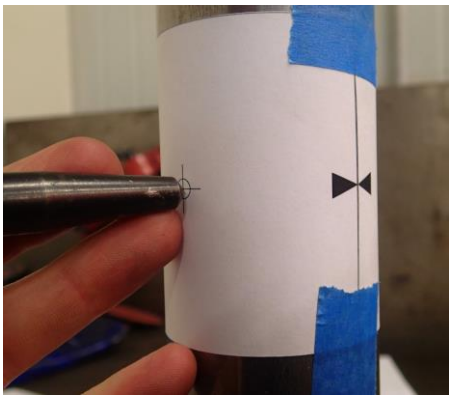

33. Using a Centre Punch, carefully Centre Punch the outer frame at the centre mark of “TEMPLATE 2”.
34. Remove “TEMPLATE 2” and retain.

    Note: <u>Do not discard.</u> Template will be re-used for the opposite side clamp installation.

Copyright © 2005 by ARB Corporation Limited. All rights reserved, this document must not be reproduced without the express authority of ARB Corporation Ltd

FRONT SIDE RAIL FITMENT TO VEHICLE - CONTINUED

35. At the location of the Centre Punch mark, use a Ø4mm (or similarly sized) Drill Bit to drill a pilot hole through the ***REAR*** face of the Bull Bar outer frame.

36. Use a Ø12mm Drill Bit to drill the Ø4mm pilot hole out to Ø12mm.

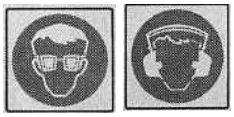

Warning: Drilling operations can result in flying metal debris, safety glasses should be worn.

37. Using a small Flat or Half-Round File carefully remove any burrs from the edge of the Ø12mm hole.

    - **Note: Care should be taken to avoid damaging the outer frame paintwork surrounding the Ø12mm hole.**

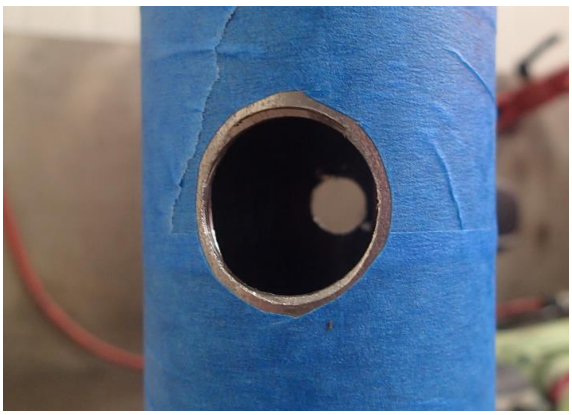

38. Remove all drill/file swarf and then clean and paint with Rust Preventative Paint any exposed/bare metal surfaces left after drilling.

    - **Note: Use tape/paper to mask surrounding areas to avoid getting paint overspray in undesired locations.**

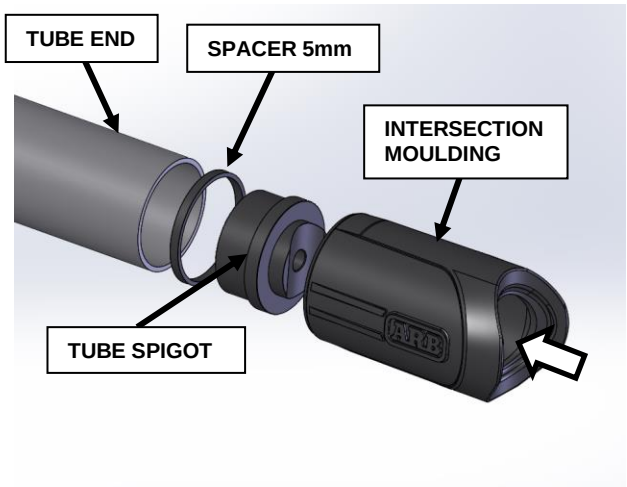

39. Install Tube Spigot, selected Spacer/Spacers and Intersection Moulding into place on the Side Rail.

Copyright © 2005 by ARB Corporation Limited. All rights reserved, this document must not be reproduced without the express authority of ARB Corporation Ltd

FRONT SIDE RAIL FITMENT TO VEHICLE - CONTINUED

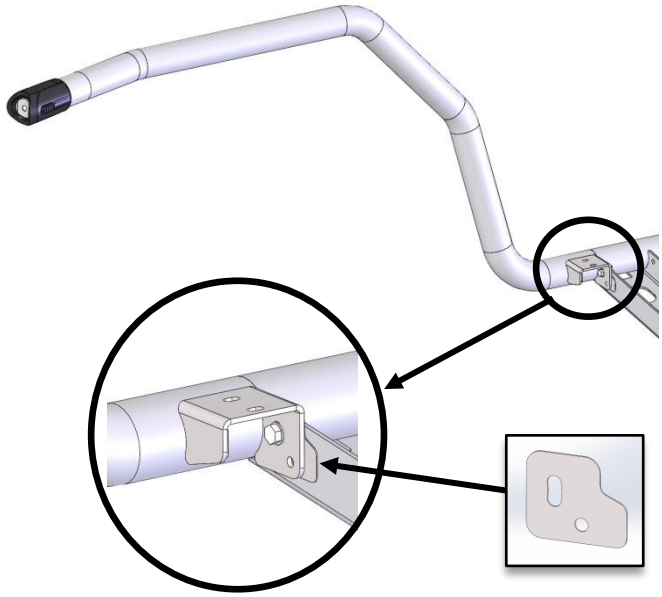

40. Install Side Rail (with clamp components fitted) onto Side Step spigot and attach using an M8x25 Bolt, 2x M8 Flat Washers and an M8 Nyloc Nut.

    Note: Install spacers as per Step 16.

    Note: Do not fully tighten at this stage.

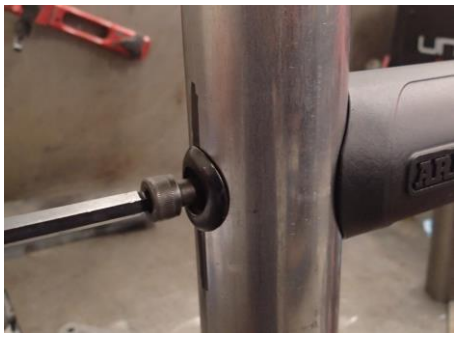

41. Install Submerged Bush and M10 Bolt.

    Torque to Specification.

    M10 57Nm **(CRITICAL).**

42. Tighten M8 Bolt ensuring the slot and holes in the 6250024 - 1mm Spacers (if fitted) are aligned with the holes in the Step / Side Rail Brackets.

Copyright © 2005 by ARB Corporation Limited. All rights reserved, this document must not be reproduced without the express authority of ARB Corporation Ltd

FRONT SIDE RAIL FITMENT TO VEHICLE - CONTINUED

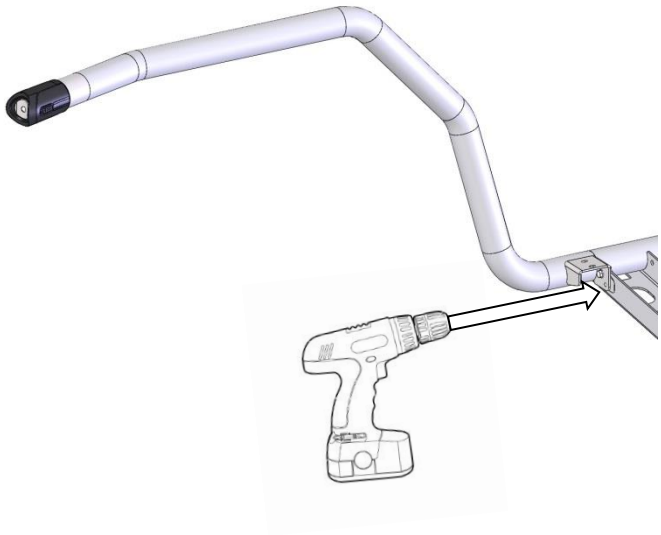

43. Using an electric drill with an Ø8mm drill bit and the pre-cut hole in the front side rail bracket as a guide, drill through the rear step section.

NOTE: IT MAY BE NECESSARY TO TEMPORARILY REMOVE THE MUD FLAPS TO GAIN ACCESS WITH THE DRILL.

44. Apply paint or a rust preventative to the bare metal.

Warning: Drilling operations can result in flying metal debris, safety glasses should be worn.

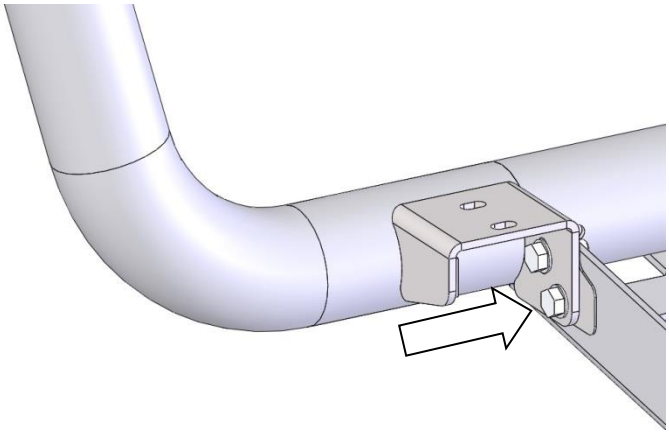

45. Pin the front side rail to the rear section using an M8x20 Bolt, 2x M8 Flat Washers and an M8 Nyloc Nut.

Torque to Specification.

M8 22Nm

SIDE STEP RETURN FITMENT TO VEHICLE.

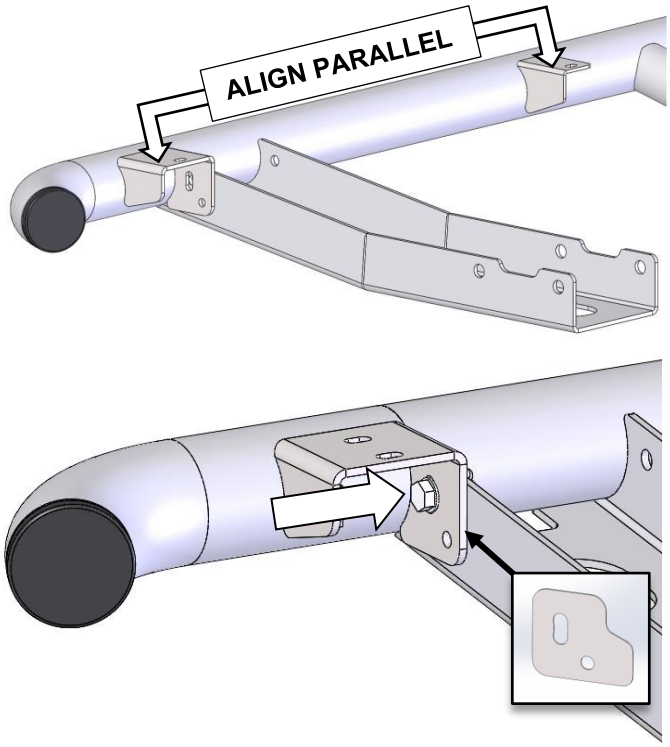

FITTING CURVED END SECTIONS

46. Place the Front Return Rail assembly onto the end of the Side Step Rear section as shown.

    When the Step and Return Rail tubes butt together, assess if any gap exists between the bracket faces. Should a gap exist, up to 2 x 1mm Spacers (6250024) may be installed between Side Step and Return brackets to obtain correct fitment.

47. Attach using an M8x20 Bolt, 2x M8 Flat Washers and an M8 Nyloc Nut. Ensure the top mounting faces of the Return bracket and the Side Step are **PARALLEL**. Tighten the M8 Bolt ensuring the slot and holes in the 6250024 - 1mm Spacers (if fitted) are aligned with the holes in the Step / Return Brackets.

Copyright © 2005 by ARB Corporation Limited. All rights reserved, this document must not be reproduced without the express authority of ARB Corporation Ltd

FRONT SIDE RAIL & SIDE STEP RETURN FITMENT TO VEHICLE

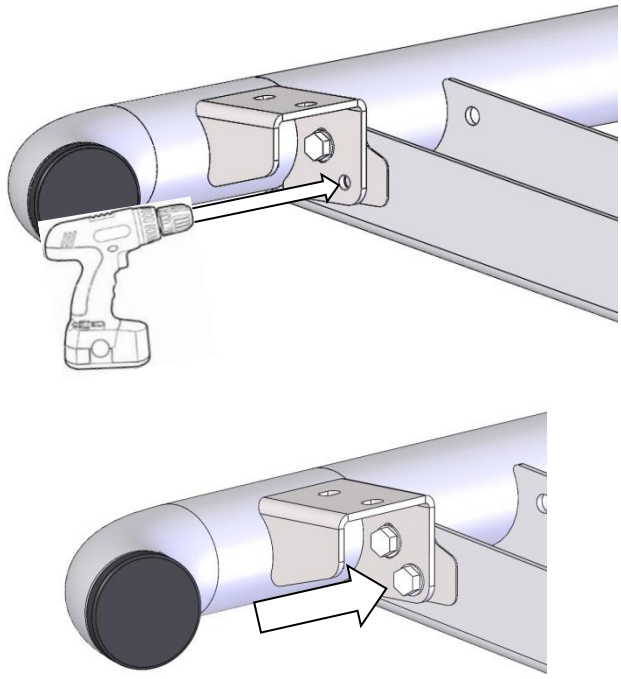

48. Using an electric drill with an Ø8mm drill bit and the pre-cut hole in the Return bracket as a guide, drill through the rear step section.

NOTE: IT MAY BE NECESSARY TO TEMPORARILY REMOVE THE MUD FLAPS TO GAIN ACCESS WITH THE DRILL.

Warning: Drilling operations can result in flying metal debris, safety glasses should be worn.

49. Apply paint or a rust preventative to the bare metal.

50. Pin the Return to the Step section using an M8x25 Bolt, 2x M8 Flat Washers and an M8 Nyloc Nut.

Torque to Specification.

M8 22Nm

THE FOLLOWING STEPS APPLY TO BOTH SIDE RAIL AND FRONT SECTION FITMENT

51. Run a bead of silicon along the top of the rail where the Tread Plate will sit. (This will help prevent vibration).

52. Position the Tread Plate on the step, aligning the bolt holes with the corresponding holes in the side step. Starting at the front of the step, secure the checker top with S/Steel M6x16 Button Head Bolts, M6 Flat Washers and M6 Flange Nuts.

Note: Over tightening of bolts may result in damage to the Tread Plates.

Torque to Specification.

M6 5Nm – (**CRITICAL)**

53. Apply the supplied ARB decals at the rear of the Side Step on both the RH and LH sides of the vehicle as indicated.

Copyright © 2005 by ARB Corporation Limited. All rights reserved, this document must not be reproduced without the express authority of ARB Corporation Ltd

FITTED PRODUCT

Side Steps with Front Rail Fitted – (Shown Above).

Side Steps with Return Fitted – (Shown Below).

Copyright © 2005 by ARB Corporation Limited. All rights reserved, this document must not be reproduced without the express authority of ARB Corporation Ltd

WELD NUT ASSEMBLY; "RH Rear Upper"

4654144R NUT PLT M10x1.5 RH HILUX 15ON

(RH SHOWN, LH IS OPPOSITE)

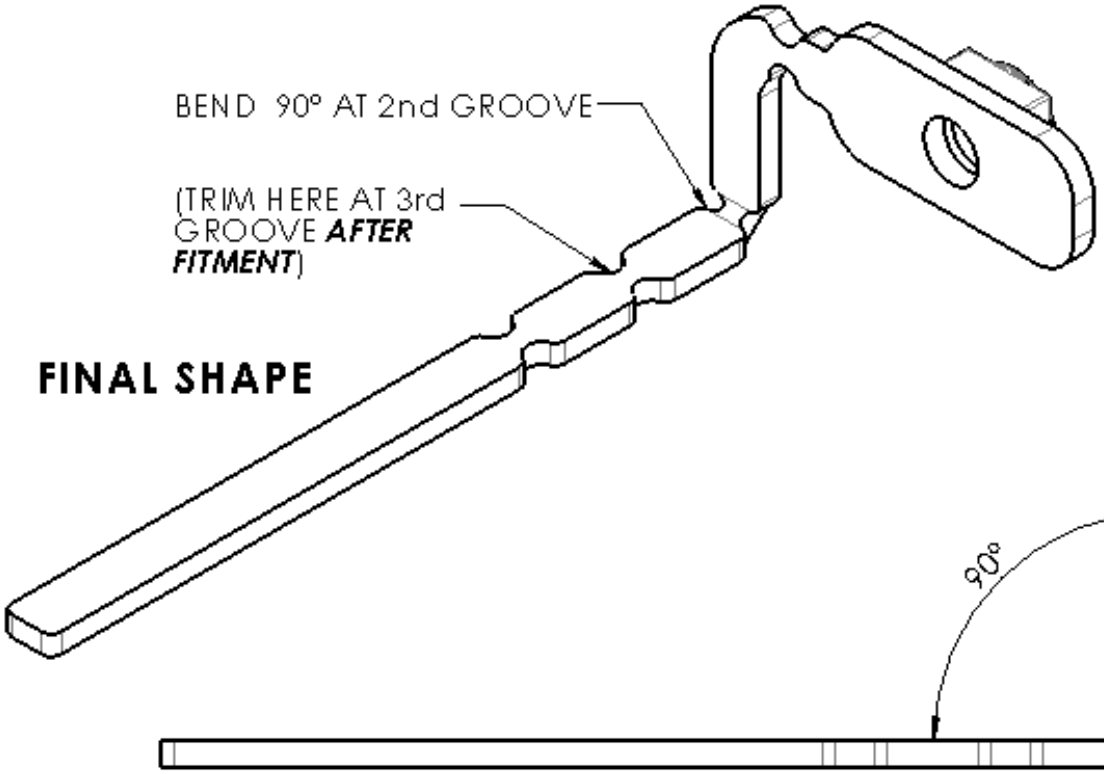

FINAL SHAPE

BEND DETAIL

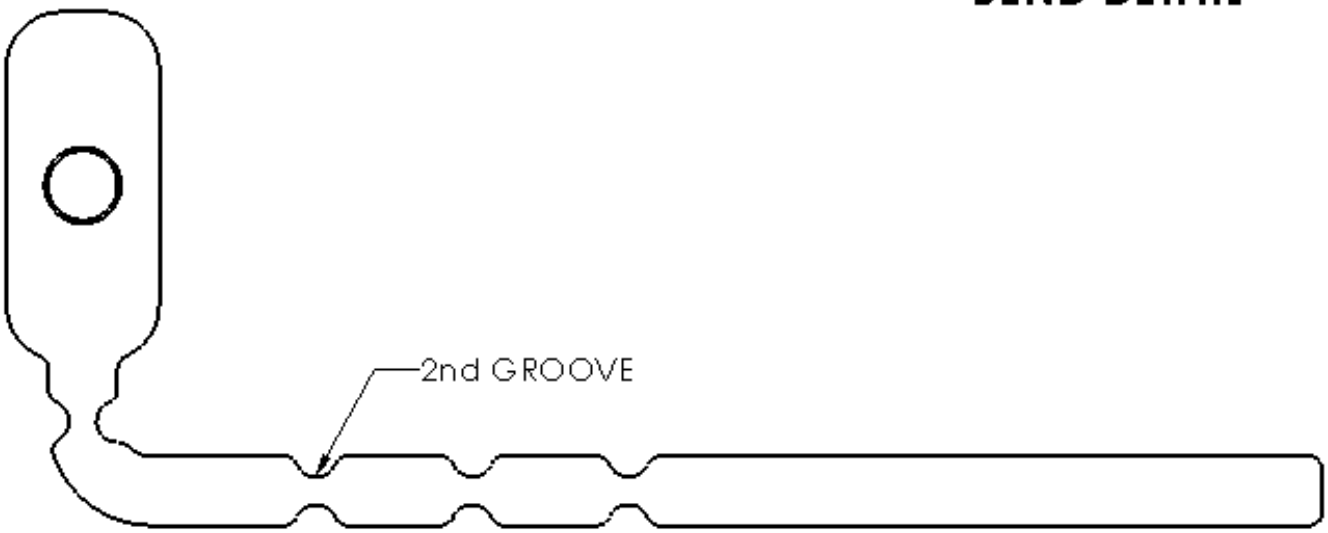

BEFORE BENDING

Copyright © 2005 by ARB Corporation Limited. All rights reserved, this document must not be reproduced without the express authority of ARB Corporation Ltd

WELD NUT ASSEMBLY; "RH Rear Middle"

4654145 NUT PLT M8x1.25 SUM HLX 15ON

(RH SHOWN)

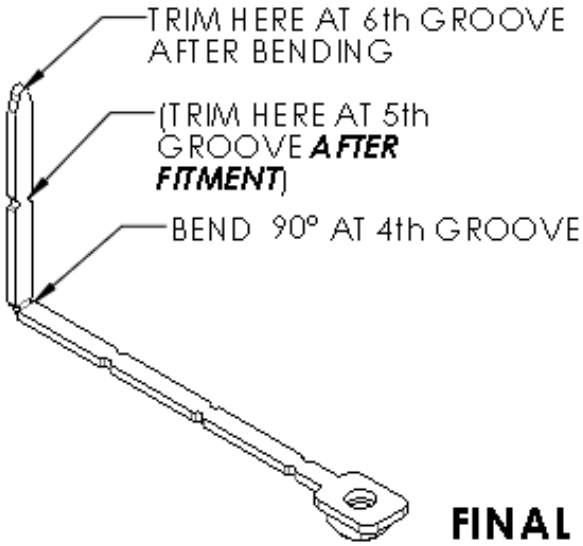

FINAL SHAPE

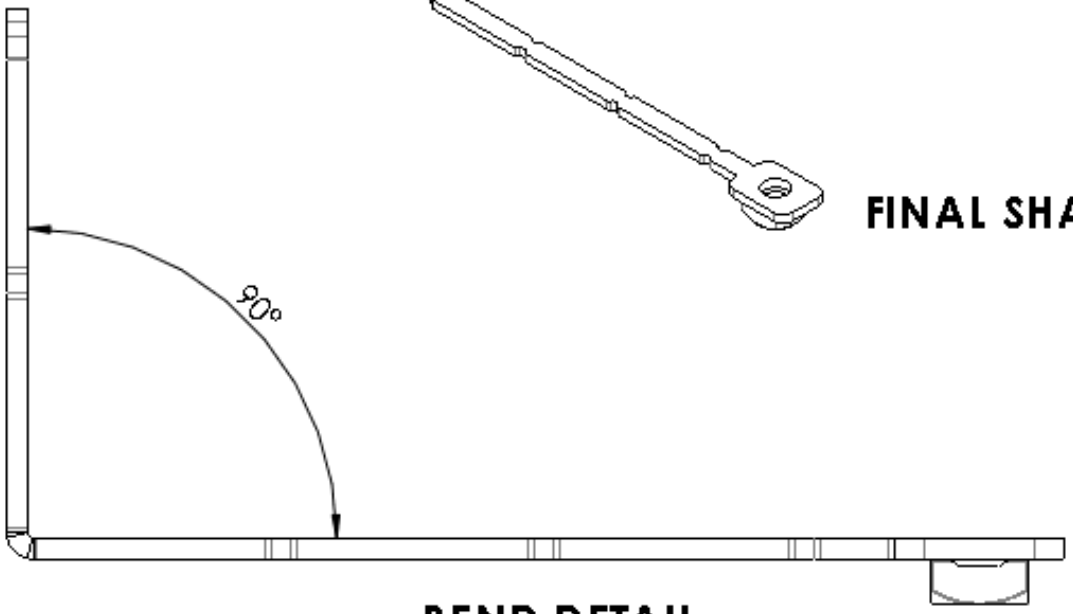

BEND DETAIL

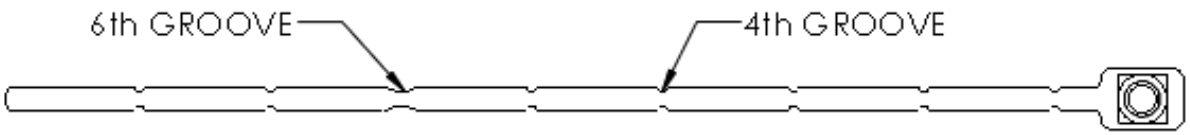

BEFORE BENDING & TRIMMING

Copyright © 2005 by ARB Corporation Limited. All rights reserved, this document must not be reproduced without the express authority of ARB Corporation Ltd

WELD NUT ASSEMBLY; "RH Rear Lower"

4654145 NUT PLT M8x1.25 SUM HLX 15ON

(RH SHOWN, LH OPPOSITE)

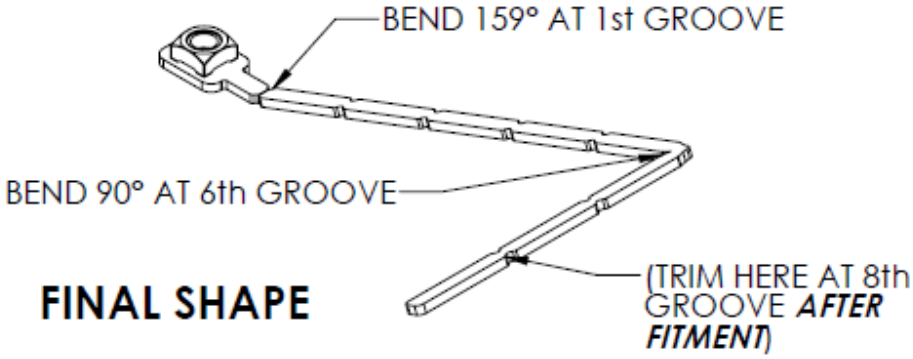

FINAL SHAPE

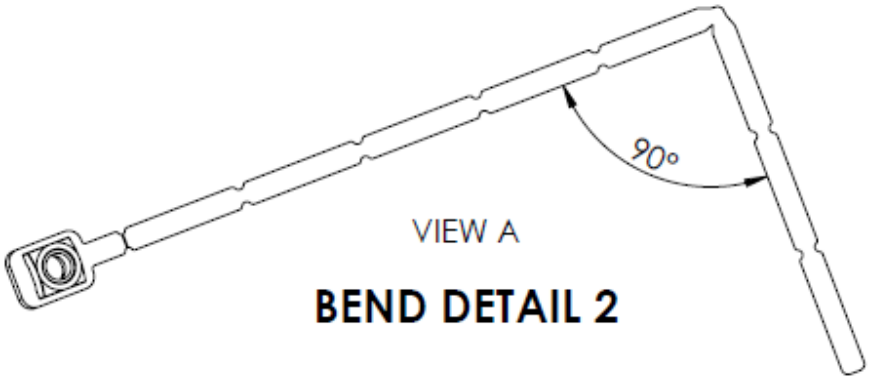

BEND DETAIL 2

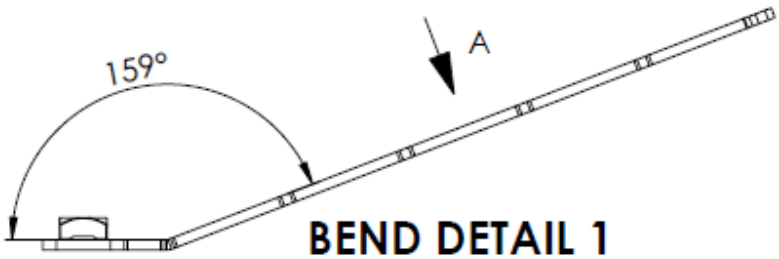

BEND DETAIL 1

BEFORE BENDING & TRIMMING

Copyright © 2005 by ARB Corporation Limited. All rights reserved, this document must not be reproduced without the express authority of ARB Corporation Ltd